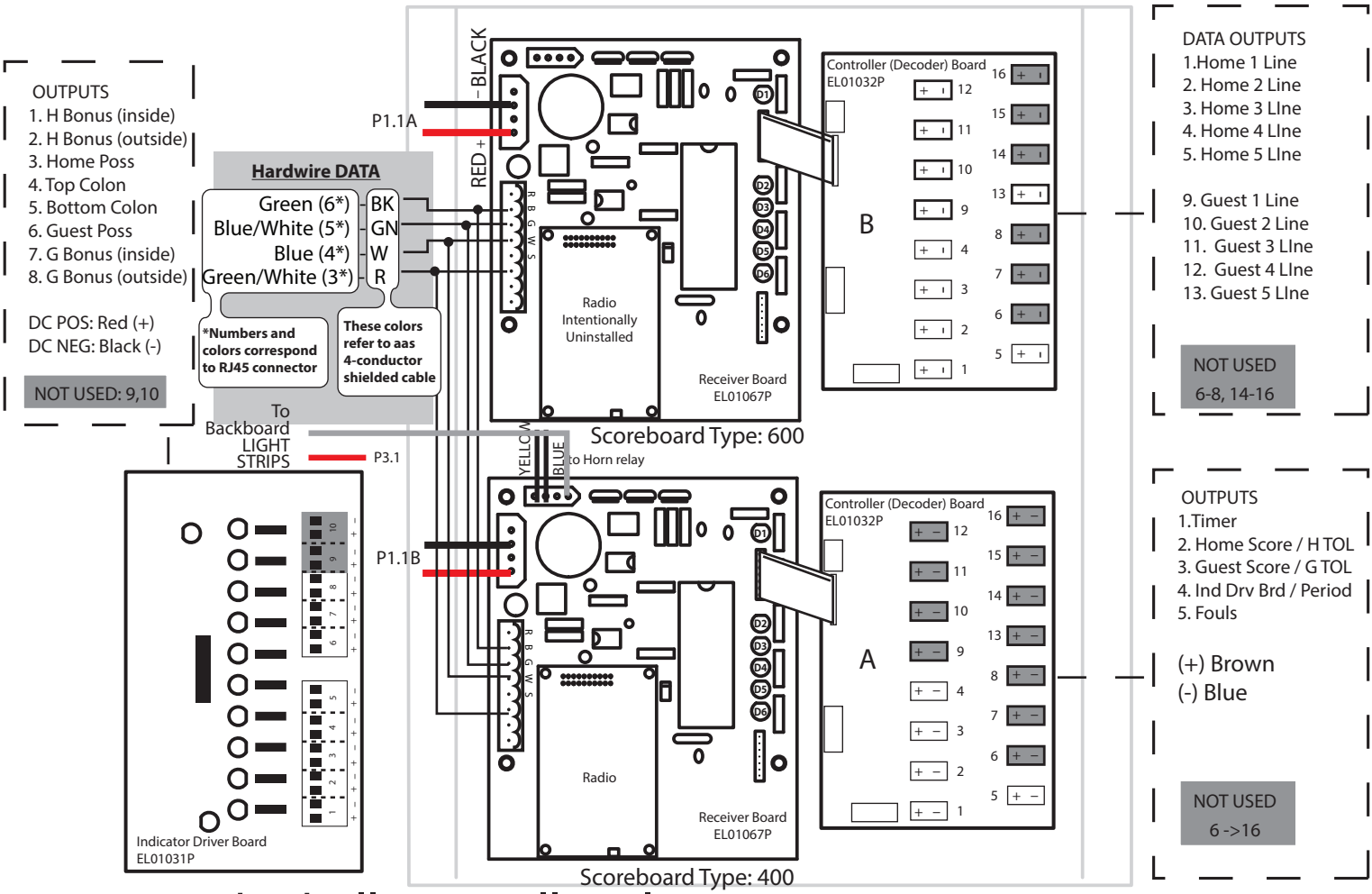

8266 Basketball Controller Plate

CONTROLLER PLATE BEHIND HOME SCORE

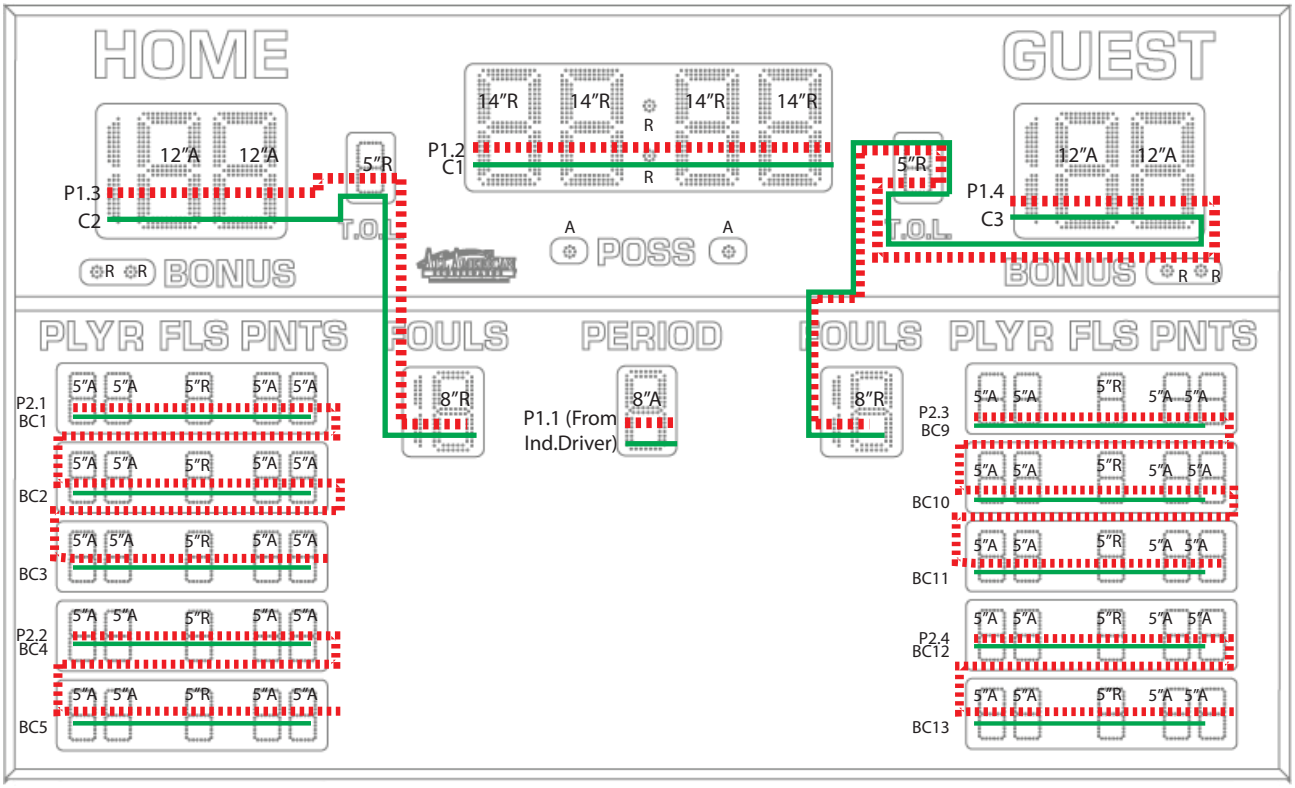

Power Supply Outputs (Full Brightness & Full Digits): P1.1≈.75A P1.2≈3.87A P1.3≈2.88A P1.4≈2.88A
P2.2≈3.67A P2.2≈2.67A P2.2≈2.45A P2.2≈2.45A P3.1≈3A

"C" refers to controller board output. If Indicators are used, C4 data will go to the Indicator Driver Board and then to the digit(s).

= DATA = 10.5VDC POWER

115 VAC / 60 Hz - 7.4 Amps

rev. 6/15/2021